Application Note: Replacing J300 with SJ300 Series Inverters

Please refer also to the SJ300 Inverter Instruction Manual

AN101001-1

Hitachi America, Ltd.

Chapter 1 – Introduction

This manual describes how to replace the J300 series inverter with the SJ300 series.
Please make sure to understand the procedure and the notes in this manual before replacement.

Major points that should be understood beforehand are:

1. Since the SJ300 is different from the J300 in dimension, you need to make additional mounting holes or prepare an attachment plate when replacing. Please refer to the Chapter 2 – Installation.
2. If the parameter settings for the J300 you use defer from the default parameter setting for the SJ300, you need to change the parameters as you desire.
Please refer to the Chapter 4 – Parameter Setting.

Chapter 2 – Installation

Since the J300 series and the SJ300 series have different dimensions, you need to make additional mounting holes or prepare an attachment plate when replacing.
Please refer to the following figures for the dimensional comparison.

2.1 In the case of making additional mounting holes

Please check beforehand that the existing wires for the J300 have enough length to be connected to the terminals of the SJ300 because, depending on where the SJ300 is placed, the wires may not reach the terminals.

[Unit: mm]

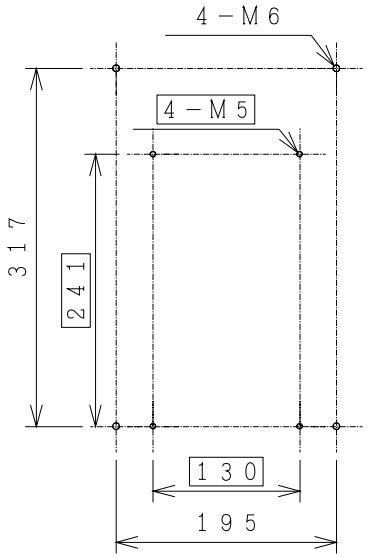

SJ300's installation dimension is in ☐.

Figure 1
From J300-015-055L/H to SJ300-015-055L/H

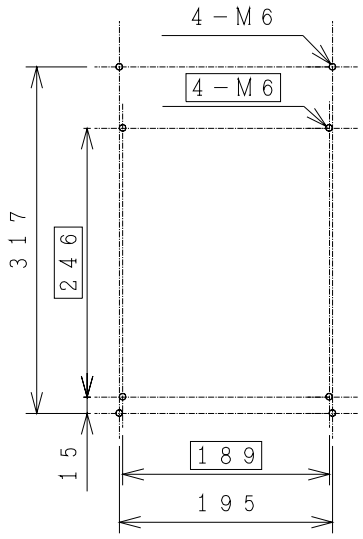

SJ300's installation dimension is in ☐.

Figure 2
From J300-075L/H to SJ300-075L/H

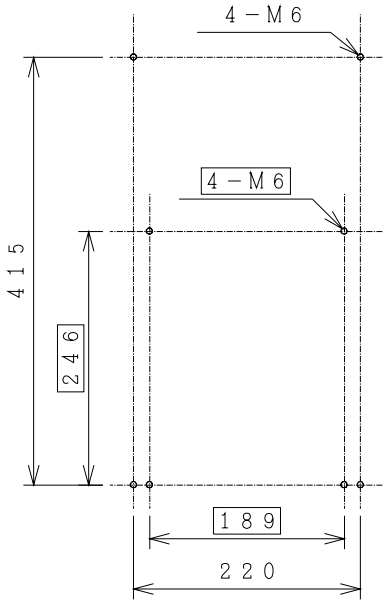

SJ300's installation dimension is in ☐.

Figure 3
From J300-110L/H to SJ300-110L/H

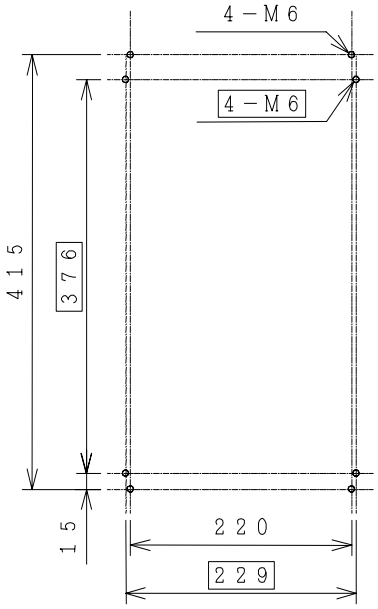

SJ300's installation dimension is in ☐.

Figure 4
From J300-150L/H to SJ300-150L/H

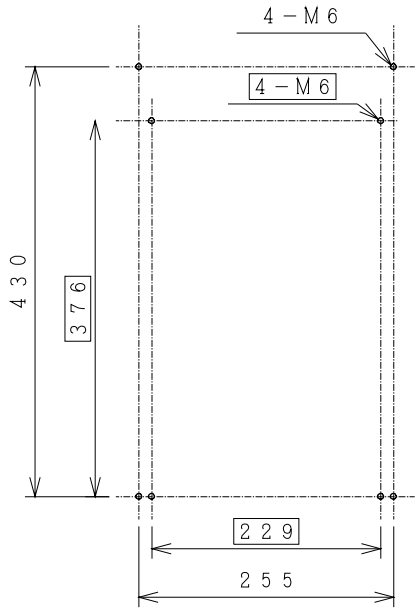

SJ300's installation dimension is in ☐.

Figure 5
From J300-220L/H to SJ300-220L/H

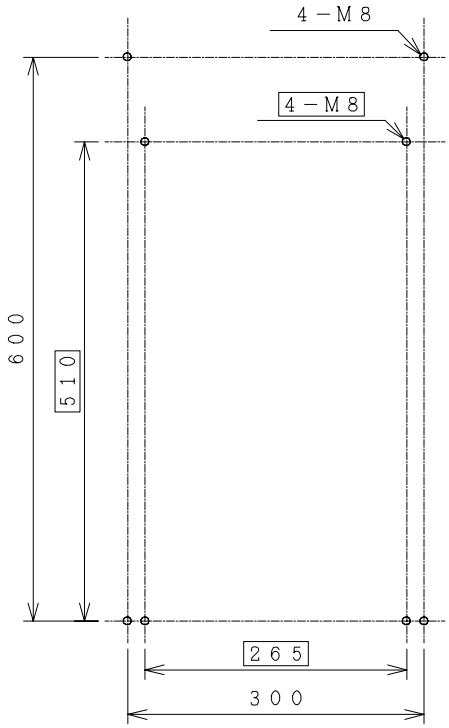

SJ300's installation dimension is in ☐.

Figure 6

From J300-300L/H to SJ300-300L/H

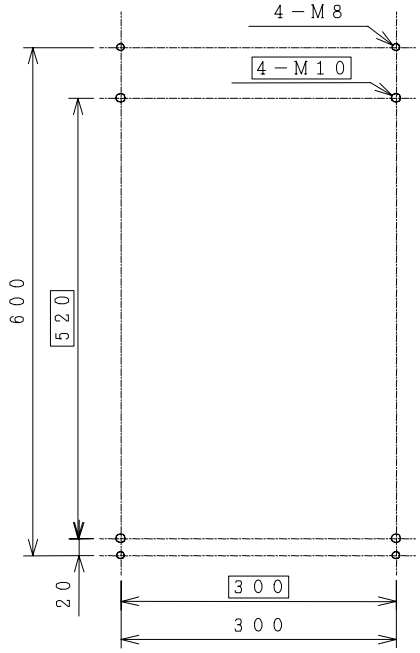

SJ300's installation dimension is in ☐.

Figure 7

From J300-370L/H to SJ300-370L/H

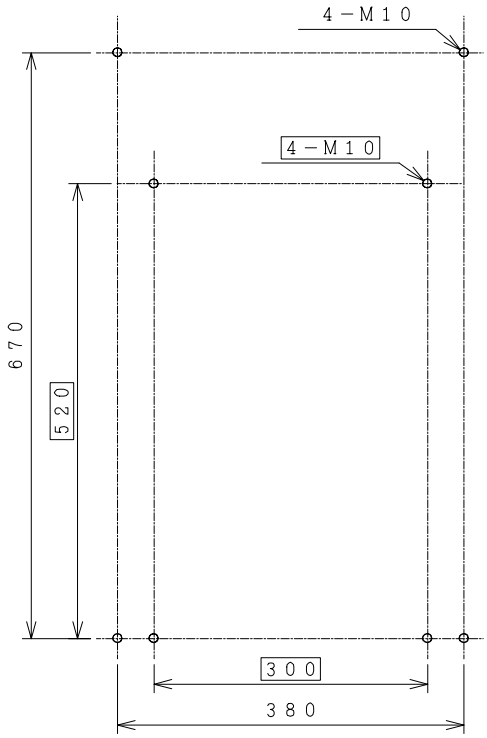

SJ300's installation dimension is in ☐.

Figure 8
From J300-450L/H, 550H to SJ300-450L/H, 550H

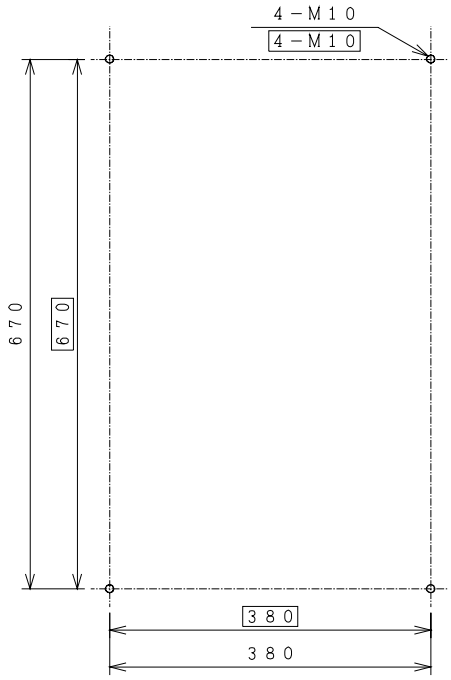

SJ300's installation dimension is in ☐.

Figure 8
From J300-550L to SJ300-550L

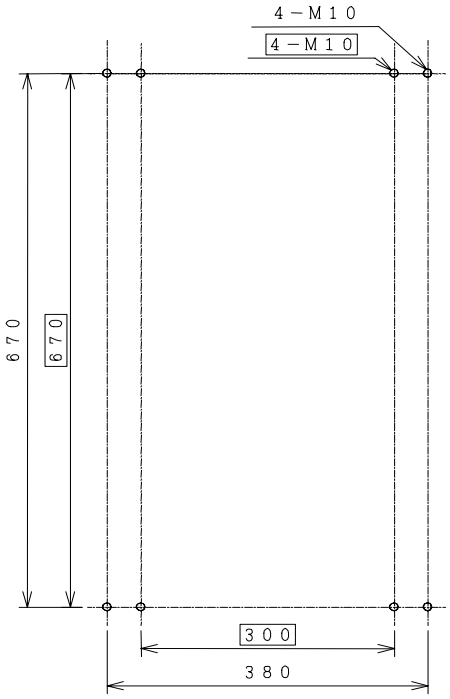

SJ300's installation dimension is in ☐.

Figure 9
From J300-750, 900H to SJ300-750, 900H

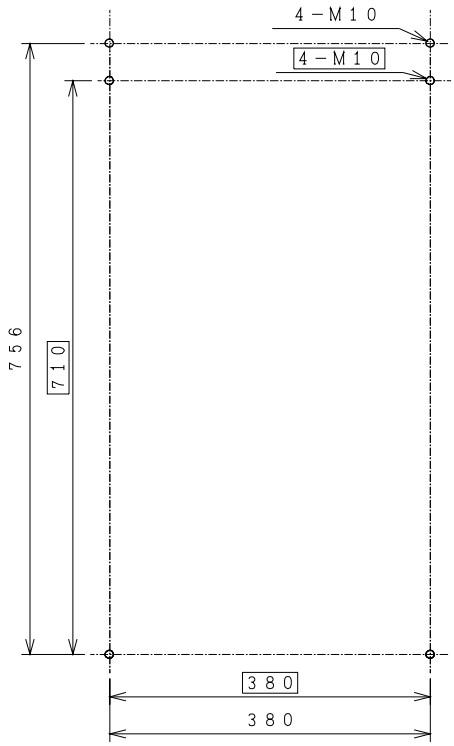

SJ300's installation dimension is in ☐.

Figure 10
From J300-1100 to SJ300-1100H

Note: When replacing J300-1320HFU with SJ300-1500HFU, please consult the factory.

2.2 In the case of using an attachment plate

An attachment plate is fixed using J300's mounting holes. The SJ300 is installed onto the attachment plate. Please contact the factory with regard to the dimensional drawings for the attachment plate.

Dimension comparison (Unit:mm)

Applicable motor (kW)	Model J300	Dimension W	Dimension H	Dimension D	Model SJ300	Dimension W	Dimension H	Dimension D	Difference in dimension W	Difference in dimension H	Difference in dimension D
1.5 to 5.5	015L to 055L	220	340	195	015L to 055L	150	255	140	-70	-85	-55
7.5	075L				075L	210	260	170	-10	-80	-25
11	110L	250	440	220	110L				-40	-180	-50
15	150L				150L	250	390	190	0	-50	-30
18.5	220L	300	450	250	185L				-50	-60	-60
22					220L						
30	300L	390	620	330	300L	310	540	195	-80	-80	-135
37	370L				370L	390	550	250	0	-70	-80
45	450L	480	700	330	450L				-90	-150	-80
55	550L				550L	480	700	250	0	0	-80

Chart 1

Comparison of dimensions

Applicable motor(kW)	Model J300	Dimension W	Dimension H	Dimension D	Model SJ300	Dimension W	Dimension H	Dimension D	Difference in dimension W	Difference in dimension H	Difference in dimension D
1.5 to 5.5	015H to 055H	220	340	195	015H to 055H	150	255	140	-70	-85	-55
7.5	075H				075H	210	260	170	-10	-80	-25
11	110H	250	440	220	110H				-40	-180	-50
15	150H				150H	250	390	190	0	-50	-30
18.5	220H	300	450	250	185H				-50	-60	-60
22					220H						
30	300H	390	620	330	300H	310	540	195	-80	-80	-135
37	370H				370H	390	550	250	0	-70	-80
45	450H	480	700	330	450H				-90	-150	-80
55	550H				550H						
75	750H	480	700	270	750H	390	700	270	-90	0	0
90	900H				900H						
110	1100H	550	780	270	1100H	480	740	270	-70	-40	0
132	1320H (UL ver.)	680	995	360	1320H /1500H				-200	255	-90

Chart 2

Comparison of dimensions

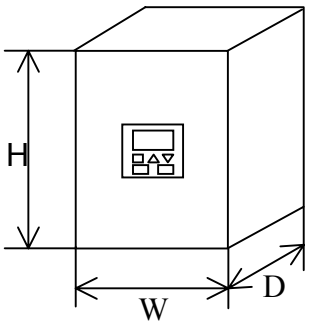

Chapter 3 - Wiring

The arrangement of the SJ300's control circuit terminals is shown below. (Figure 12 and 13) Please note that J300's control circuit terminals are arranged vertically while SJ300's are arranged horizontally.

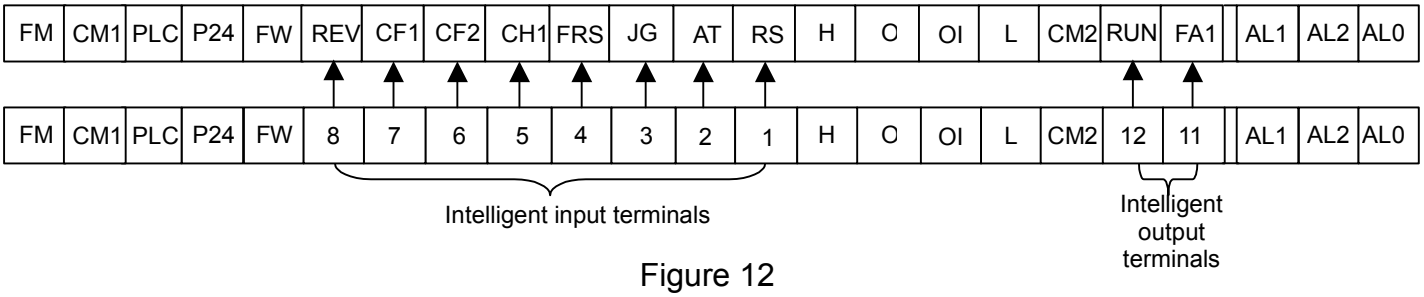

Figure 12

J300's control circuit terminals

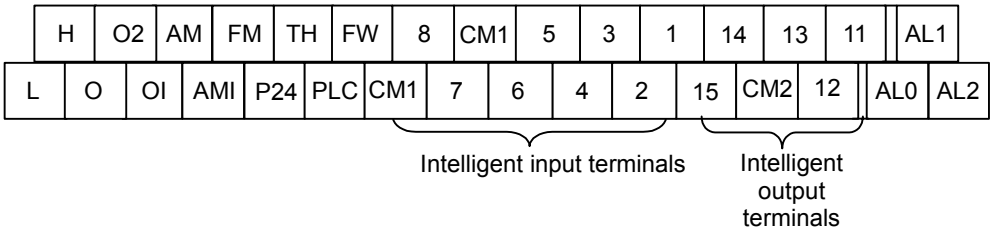

Figure 13

SJ300's control circuit terminals

Motor capacity (kW)	J300		SJ300	
	Screw diameter	Terminal width (mm)	Screw diameter	Terminal width (mm)
1.5 to 132	M3	6.2	M3	6.4

Chart 3

Screw diameter and terminal width

3.1 Intelligent Input Terminal

(1) Default settings

The eight input terminals 1 to 8 can be configured for any of 44different functions.

The J300 and the SJ300 have the same default setting for each version (E type, U type), but the function codes and the symbols are different in some parts. Please see the chart 4 for the default setting of the J300 and the SJ300.

Terminal number	Default setting				
	Function name ( )=US ver.	J300		SJ300	
		Function code	Symbol ( )=US ver.	Function code	Symbol ( )=US ver.
1	Reset	C0	RS (18)	C001	RS (18)
2	Analog input selection	C1	AT (16)	C002	AT (16)
3	Jogging	C2	JG (5)	C003	JG (06)
4	Free-run stop	C3	FRS (11)	C004	FRS (11)
5	Second acccel/decel	C4	CH1 (9)	C005	2CH (09)
6	Multispeed (2) (Unattended start protection)	C5	CF2 (2) (USP(13))	C006	CF2 (03) (USP(13))
7	Multispeed (1)	C6	CF1 (1)	C007	CF1 (02)
8	Reverse	C7	REV (0)	C008	RV (01)

Chart 4

Default settings for intelligent input terminals

(2) Contact logic conversion

The intelligent input terminals of J300 and SJ300 default to NO contacts. Please refer to the chart 5 for the logic conversion of the contacts in the case of the SJ300.

Terminal symbol	Function code	Option code	
		00	01
1	C011	NO	NC
2	C012	NO	NC
3	C013	NO	NC
4	C014	NO	NC
5	C015	NO	NC
6	C016	NO	NC
7	C017	NO	NC
8	C018	NO	NC

Chart 5

SJ300 intelligent input terminal logic selection

3.2 Alarm terminal (NO-NC contact)

(1) In the case of being connected to AL1

Since the AL1 is initially configured as normally closed, it is closed during normal operation, and opens in case of alarm or power shutoff.

(2) In the case of being connected to AL2

Since AL2 is initially configured as normally open, it is open during normal operation, and closed in case of alarm or power shutoff.

(3) Contact logic conversion

The alarm contact defaults to normally closed for both J300 and SJ300. Please refer to the chart 6 for the logic conversion of the contact in the case of the SJ300.

(Please see the figure 14 and 15 for the operation of the contact.)

Terminal symbol	Function code	Option code	
		00	01
AL0, AL1, AL2	C036	a	b

Chart 6

SJ300 alarm relay terminal logic selection

(4) To seal in the alarm signal

The J300 cannot seal in the alarm signal because the alarm output is cancelled when the main power is shut off. On the other hand, SJ300 can seal in the alarm signal because the power for the control circuit can be maintained by using the R0T0 terminals.

To seal in the alarm signal, supply the R0T0 terminals with the power externally after removing the J51 connection wiring.

Please refer to the Chart 14 and 15 for the alarm relay operation.

Error	Normal or Power-off	Normal	Error or Power-off

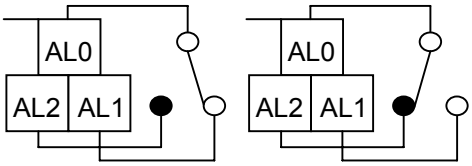

Figure 14
Normally open contact

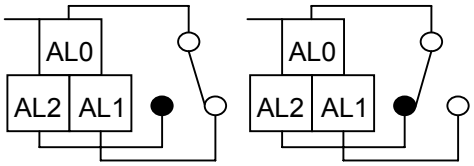

Figure 15
Normally closed contact

Power	Inverter status	AL0-AL1	AL0-AL2
ON	Normal	Open	Closed
ON	Error	Closed	Open
OFF	—	Open	Closed

Power	Inverter status	AL0-AL1	AL0-AL2
ON	Normal	Closed	Open
ON	Error	Open	Closed
OFF	—	Open	Closed

3.3 Intelligent output terminals

(1) Default setting

While the J300 has 2 intelligent output terminals, the SJ300 has 5 terminals.

The SJ300 has different default settings, symbols, and data for the intelligent output terminals from those for the J300. Chart 7 lists the default settings that can be seen on the display of the digital operator.

Terminal symbol	J300 default setting			SJ300 default setting		
	Function code	Description	Data	Function code	Description	Data
11	C10	Frequency arrival (constant speed)	FA1 (0)	C021	Frequency arrival (constant speed)	FA1（01）
12	C11	RUN signal	RUN (1)	C022	RUN signal	RUN (00)
13	-	-	-	C023	Overload advance notice signal	OL（03）
14	-	-	-	C024	Over-torque signal	OTQ（07）
15	-	-	-	C025	Instantaneous power failure signal	IP（08）

Chart 7

Intelligent output terminal default setting

(2) Contact logic conversion

For both J300 and SJ300, intelligent output terminals default to normally open, but you can select normally closed for the terminals by converting the sense of the logic.

Terminal symbol	Function code	Data (option code)	
		00	01

11	C031	NO	NC
12	C032	NO	NC
13	C033	NO	NC
14	C034	NO	NC
15	C035	NO	NC

Chart 8

SJ300 intelligent output terminal default setting

3.4 Expansion cards

(1) J-RY (Relay output PCB)

Please use L300PTM (standard control signal) terminal block.

Refer to Chart 9 for its specifications.

<table>
<tr><th colspan="3">J-RY（J300）</th><th colspan="3">L300PTM（SJ300）</th></tr>
<tr><th colspan="2">Terminal symbol</th><th>Terminal specifications</th><th colspan="2">Terminal symbol</th><th>Terminal specifications</th></tr>
<tr><td>RYA1</td><td>RYA0</td><td rowspan="3">AC250V, 2.5A (R load), 0.2A (I load)
DC30V, 3A (R load), 0.7A (I load)
Minimum load AC100V, 10mA, DC5V, 100mA</td><td>11A</td><td>11C</td><td rowspan="3">AC250V, 5A (R load), 1A (I load)
DC30V, 5A (R load), 1A (I load)
Minimum load AC100V, 10mA, DC5V, 100mA</td></tr>
<tr><td>RYB1</td><td>RYB0</td><td>12A</td><td>12C</td></tr>
<tr><td>RYC1</td><td>RYC0</td><td>-</td><td>-</td></tr>
</table>

Chart 9

Relay output function comparison chart

(2) J-R0T0 (Control power supply PCB)

The SJ300 has R0T0 terminals as standard.

When supplying the R0T0 terminals with power externally, remove J51 jumper beforehand.

(3) J-FB (Feedback PCB)

Please use SJ-FB.

The SJ-FB does not have the analog monitor (MA1 and MA2) which the J-FB has.

When this function is required, please use the analog monitor provided on the SJ300 (AM and AMI).

(4) J-AG (Analog input/output PCB)

SJ300 have two analog outputs, -10 to +10V frequency setting input, and torque limit setting input. Please refer to the chart 10 for the details.

<table>
<tr><th colspan="2">Item</th><th colspan="3">J-AG (J300)</th><th colspan="3">SJ300</th></tr>
<tr><th>Spec.</th><th>Description</th><th>Terminal symbol</th><th colspan="2">Terminal specifications</th><th>Terminal symbol</th><th colspan="2">Terminal specifications</th></tr>
<tr><td rowspan="2">Input</td><td>Frequency setting</td><td>SO-L</td><td colspan="2">DC –10 to 10V
Input impedance: 30kohms</td><td rowspan="2">O2-L</td><td colspan="2" rowspan="2">DC –10 to 10V
Input impedance: 10kohms</td></tr>
<tr><td>Torque limit</td><td>TRQ-L</td><td colspan="2">DC 0 to10V
Input impedance: 30kohms</td></tr>
<tr><td rowspan="2">Output</td><td rowspan="2">Analog monitor output</td><td>MA1-L</td><td>DC 0 to 10V
3mA max</td><td>Analog voltage</td><td>AM</td><td>DC 0 to10V
2mA max</td><td>Analog voltage</td></tr>
<tr><td>MA2-L</td><td>DC 0 to 10V
3mA max</td><td>Analog voltage</td><td>AMI</td><td>DC 4 to 20mA
Allowable Z: 250ohms</td><td>Analog current</td></tr>
<tr><td rowspan="3">Power source</td><td rowspan="3">Interface power supply</td><td>P12-L</td><td colspan="2">DC+12V 30mA</td><td>-</td><td colspan="2">-</td></tr>
<tr><td>N12-L</td><td colspan="2">DC-12V 30mA</td><td>-</td><td colspan="2">-</td></tr>
<tr><td>P24-CM1</td><td colspan="2">DC24V 10mA</td><td>P24-CM1</td><td colspan="2">DC24V 100mA</td></tr>
</table>

Chart 10

Analog input/output comparison chart

Note 1: -10 to +10V frequency setting input and torque limit setting input can be made only from O2 terminal. They cannot be input simultaneously.

Note 2: SJ300 does not have interface power supply for negative voltage.
Please prepare external power supply when inputting negative voltage at O2 terminal.

(5) J-DG (Digital input PCB)

Please use SJ-DG.

While the J-DG supports 12-bit data input, 16-bit data input is possible with the SJ-DG.
When replacing J-DG with SJ-DG, match upper bit (MSB) and short lower 4 bit to the D4 terminal or input the same data as in D4.

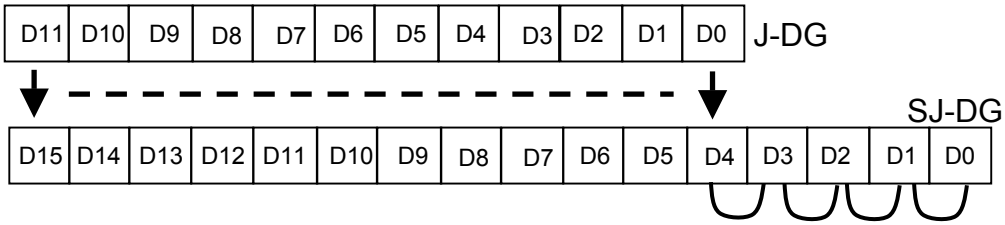

Figure 16
Wiring when replacing

(6) J-CM (Communication PCB)
SJ300 has RS-485 serial communication interface as standard.

Item	J-CM (J300)	SJ300
Interface	RS-485 1 port (Terminal) 1:N (Maximum 32 stations)	
Communication mode / Synchronization	Half duplex / Synchronization	
Transmission speed	300/600/1200/4800/9600bps	2400/4800/9600/19200bps
Transmission distance	Maximum 250m	
Start convention	One-way start from host device command	

Chart 11
Communication method comparison chart

(7) J-HR (High resolution analog input PCB)
The SJ300 has analog input filter function as standard. With this function, the inverter can operate by the input from O, O2, and OI terminal with the precision equivalent to that of J-HR.

Function code	Setting Range
A016	Range n=1 to 30, Where n = number of samples for average

Chart 12
SJ300 analog input filter

It becomes equivalent to J-HR by increasing the filter setting to the maximum value of 30.
Calculation time of 10ms to 60ms is required for the filter setting of 1 to 30.

Chapter 4 - Parameter Setting

If the current setting values of the J300 are different form the SJ300 default setting value, you need to change the setting. Please refer to the following for comparison.

4.1 Monitoring functions

No.	Name	J300			SJ300		Remarks
		Function code		Default setting	Function code (Digital operator)	Default setting	
		Digital operator	Remote Operator				
1	Output frequency setting	F2	FS	000.0	F001	0.00	Can be set also by A020 in the case of the SJ300
2	Multi-speed frequency setting	F2	1S	0.0	A021	0.00	
		F2	7S	0.0	A027	0.00	
3	Output frequency setting	F2	TM	0.0	F001	0.00	
4	Jog frequency setting	F2	JG	1.0	A038	1.00	Jogging stop mode can be selected by A039 in the case of the SJ300.
5	Option 1 setting frequency	F2	O1	0.0	F001	0.00	
6	Option 2 setting frequency	F2	O2	0.0	F001	0.00	
7	Output frequency monitor	d0	FS	0.00	d001	0.00	
8	Acceleration time setting 1	F6	ACC1	30.0	F002	30.00	
	Acceleration time setting 2	F6	ACC1	30.0	F202	30.00	
9	2-stage acceleration time setting	F6	ACC2	15.0	A092	15.00	
10	Deceleration time setting 1	F7	DEC1	30.0	F003	30.00	
	Deceleration time setting 2	F7	DEC1	30.0	F203	30.00	
11	2-stage deceleration time setting	F7	DEC2	15.0	A093	15.00	
12	Motor pole number setting for rotation speed monitor	A25	RPM_	4	-	-	Not supported by the SJ300; substitutable with b086
13	Motor rotation speed monitor	d1	_RPM	0	-	-	Not supported by the SJ300; substitutable with d007
14	Frequency scaling conversion factor	A47	/Hz_	1.0	b086	1.0	
15	Scaled output frequency monitor	d3	/Hz_	0.00	d007	0.00	
16	Output current monitor	d2	Im_	0.00	d002	0.00	
17	Output current proportion monitor	-	Im_	0.0	-	-	Not supported by the OPE-J (J300); not supported by the SJ300
18	Torque monitor	-	Torque	0	d012	0.0	Not supported by the OPE-J (J300)
19	Manual torque boost value 1	F8	V-Boost Code	11	A042	1.0	Voltage level is equivalent although the default settings are different between J300 and SJ300.
	Manual torque boost value 2	F8	V-Boost Code	11	A242	1.0	
20	Manual torque boost frequency adjustment 1	-	V-Boost F	10	A043	5.0	The SJ300 has the different default setting (5%) from that (10%) of the J300.
	Manual torque boost frequency adjustment 2	-	V-Boost F	10	A243	5.0	
21	V/f gain setting	-	V-Gain	100	A045	100	
22	Jog frequency setting	A61	Jogging	1.00	A038	1.00	Jogging stop mode can be selected by A039 in the case of the SJ300.
23	FM terminal analog meter adjustment	F10	ADJ	172	b081	60	AM and AMI terminals can be also adjusted independently in the case of the SJ300.
24	Intelligent input terminal monitor	-	TERM	LLLLLLLLL	d005	Note	Note: Displayed by the 4-digit display; intelligent output terminal monitor is also supported by d006.

4.2 Function mode

No.	Name	J300				SJ300		Remarks
		Function code			Default setting	Function code (Digital operator)	Default setting	
		Digital operator	Remote Operator					
1	Frequency source setting	F9	F-SET-SELCT		REM	A001	02	
2	Run command source setting	F9	F/R-SELCT		REM	A002	02	
3	Data command method	-	F-09	PARAM	REM	C070	02	
4	Initialization mode (parameters or trip history)	-	F-38	INIT TCNT	CNT	b084	00	
5	Debug mode enable	-		INIT DBGU	OFF	C091	00	
6	Keypad RUN key routing	F4		INIT DOPE	FWD	F004	00	
7	Reset mode selection	A86		INIT RESET	ON	C102	00	
8	Base frequency setting 1	A62	F-00	F-BASE	60	A003	60	
	Base frequency setting 2	A62		F-BASE	60	A203	60	
9	Maximum frequency setting 1	A63	F-01	F-MAX	60	A004	60	
	Maximum frequency setting 2	A63		F-MAX	60	A204	60	
10	Start frequency adjustment	A4	F-02	F-min	0.5	b082	0.50	
11	AVR voltage select	F11	F-03	AVR AC	200/400	A082	200/400	
12	AVR function select	-		AVR AC	ON	A081	00	
13	V/f characteristic curve selection 1	A0	F-04	CONTROL	VC	A044	00	
	V/f characteristic curve selection 2	A0		CONTROL	VC	A244	00	
14	Auto-tuning setting	A97	F-05	AUX AUTO	NOR	H001	00	
15	Motor data selection 1	A98		AUX DATA	TMO	H002	00	
	Motor data selection 2	A98		AUX DATA	TMO	H202	00	
16	Motor capacity setting 1	A1		AUX K	Factor set	H003	Factor set	
	Motor capacity setting 2	A1		AUX K	Factor set	H203	Factor set	
17	Motor poles setting 1	A2		AUX P	4	H004	4	
	Motor poles setting 2	A2		AUX P	4	H204	4	
18	Motor constant R1 1	-		AUX R1	Factor set	H020	Factor set	
	Motor constant R1 2	-		AUX R1	Factor set	H220	Factor set	
19	Motor constant R2 1	-		AUX R2	Factor set	H021	Factor set	
	Motor constant R2 2	-		AUX R2	Factor set	H221	Factor set	
20	Motor constant L 1	-		AUX L	Factor set	H022	Factor set	
	Motor constant L 2	-		AUX L	Factor set	H222	Factor set	
21	Motor constant M 1	-		AUX M	Factor set	H023	Factor set	Io is set in the case of the SJ300.
	Motor constant M 2	-		AUX M	Factor set	H223	Factor set	
22	Motor constant J 1	-		AUX J	Factor set	H024	Factor set	
	Motor constant J 2	-		AUX J	Factor set	H224	Factor set	
23	Speed response proportional constant Kp 1	A3		AUX Kp	2.00	H050	100.0	Motor proportional gain constant setting in the case of the SJ300.
	Speed response proportional constant Kp 2	A3		AUX Kp	2.00	H250	100.0	
24	Option constant Ti 1	-		AUX Ti	100ms	H051	100.0	Motor integral gain constant setting in the case of the SJ300.
	Option constant Ti 2	-		AUX Ti	100ms	H251	100.0	
	Option constant Kpp 1	-		AUX Kpp	1.00	H052	1.00	
	Option constant Kpp 2	-		AUX Kpp	1.00	H252	1.00	
25	Carrier frequency setting	A10	F-36	CARRIER	Factor set	b083	Factor set	Please refer to 4.3 Carrier Frequency.

No.	Name	J300			SJ300		Remarks
		Function code		Default	Function	Default setting	

		Digital operator	Remote Operator		setting	code (Digital operator)		
26	Acceleration time setting 1	F6	F-06	ACC1	30.0	F002	30.00	
	Acceleration time setting 2	F6		ACC1	30.0	F202	30.00	
27	Second acceleration time setting	F6		ACC2	15.0	A092	15.00	Second acceleration time (A292) can be also set in the case of the SJ300.
28	Acceleration curve selection	-		ACC LINE	L	A097	00	
29	Acceleration curve constants setting	-		ACC GAIN	02	A131	02	
30	Deceleration time setting 1	F7	F-07	DEC1	30.0	F003	30.00	
	Deceleration time setting 2	F7		DEC1	30.0	F203	30.00	
31	Second deceleration time setting	F7		DEC2	15.0	A093	15.00	Second deceleration time (A293) can be also set in the case of the SJ300.
32	Deceleration curve selection	-		DEC LINE	L	A098	00	
33	Deceleration curve constants setting	-		DEC GAIN	02	A132	02	
34	Acceleration stop frequency setting	-	F-08	FSP F	0.0Hz	A069	0.00	
35	Acceleration stop time setting	-		FSP TIME	0.0s	A070	0.0	
36	Operation mode selection	A59	F-10	RUN MODO	NOR	A085	00	
37	Resume on free-run stop cancellation mode	A54		RUN FRS	ZST	b088	00	
38	Multi-speed frequency setting 1	A12	F-11	SPD 1	0.00	A021	0.00	
39	Multi-speed frequency setting 2	A13		SPD 2	0.00	A022	0.00	
40	Multi-speed frequency setting 3	A14		SPD 3	0.00	A023	0.00	
41	Multi-speed frequency setting 4	F2		SPD 4	0.00	A024	0.00	
	Multi-speed frequency setting 7	F2		SPD 7	0.00		0.00	
42	DC braking enable	-	F-20	DCB SW	OFF	A051	00	DC braking carrier frequency (A059) can be also set in the case of the SJ300.
43	DC braking / edge or level detection	-		DCB KIND	LVL	A056	01	
44	DC braking frequency setting	-		DCB F	0.5Hz	A052	0.50	
45	DC braking force for starting	-		DCB V-STA	00	A057	0.	
46	DC braking force during deceleration	-		DCB V-STP	00	A054	0.	
47	DC braking time for starting	-		DCB V-STA	0.0s	A058	0.0	
48	DC braking time during deceleration	-		DCB V-STP	0.0s	A055	0.0	
49	DC braking wait time	-		DCB STOP-T	0.00s	A053	0.0	
50	Dynamic braking usage ratio	A38	F-21	BRD-%ED	1.5%	b090	0.0	SJ300 have dynamic braking control (b095) and dynamic braking activation level setting (b096).
51	Electronic thermal characteristic 1	A24	F-23	E-THM CHAR	SUB	b013	00	Can be set up to 3rd motor (b313) in the case of the SJ300.
	Electronic thermal characteristic 2	A24		E-THM CHAR	SUB	b213	00	
52	Level of electronic thermal setting 1	A23		E-THM LEVEL	100%	b012	Rated current	Can be set up to 3rd motor (b312) in the case of the SJ300.
	Level of electronic thermal setting 2	A23		E-THM LEVEL	100%	b212	Rated current	
53	Free setting, electronic thermal current 1	-		E-THM A1	Factory set	b016	0.0	
54	Free setting, electronic thermal frequency 1	-		E-THM F1	Factory set	b015	0.	
55	Free setting, electronic thermal current 2	-		E-THM A2	Factory set	b018	0.0	
56	Free setting, electronic thermal frequency 2	-		E-THM F2	Factory set	b017	0.	
57	Free setting, electronic thermal current 3	-		E-THM A3	Factory set	b020	0.0	
58	Free setting, electronic thermal frequency 3	-		E-THM F3	Factory set	b019	0.	
59	Overload restriction setting	-	F-24	OLOAD LEVEL	125%	b022	Rated current x1.5	Two sets of overload restriction parameter settings and values are available in the case of the SJ300. (b025, b026, b024) Selection can be made by OLR function assigned to an intelligent input terminal.
60	Overload restriction constant setting	-		OLOAD CONST	1.0	b023	1.00	
61	Overload restriction, enable for acceleration	-		OLOAD ACC	ON	b021	01	
No.	Name	J300				SJ300		Remarks
		Function code			Default	Function	Default setting	

		Digital operator	Remote Operator		setting	code (Digital operator)		
62	Frequency lower limit setting	A6	F-26	LIMIT L	0.0Hz	A062	0.00	A value for the second motor can be set independently by A262 in the case of the SJ300.
63	Frequency upper limit setting	A5		LOMIT H	0.0Hz	A061	0.00	A value for the second motor can be set independently by A261 in the case of the SJ300.
64	Jump frequency setting 1	A7		JUMP F1	0.0Hz	A063	0.00	
65	Jump frequency setting 2	A8		JUMP F2	0.0Hz	A065	0.00	
66	Jump frequency setting 3	A9		JUMP F3	0.0Hz	A067	0.00	
67	Jump frequency width setting	-		JUMP W	0.5Hz	Note	0.50	Note: Jump frequency width setting: A064, A066, and A068
68	Allowable instantaneous power failure time	-	F-22	IPS TIME	1.0s	b002	1.0	
69	Retry wait time before motor restart	-		IPS WAIT	1.0s	b003	1.0	
70	Selection of automatic restart mode after instantaneous power failure	A34		IPS POWR	ALM	b001	00	
71	Voltage trip enable during stop	-		IPS TRIP	OFF	b004	00	
72	Maximum frequency selection	A64	F-30	F-MAX-L	120Hz	-	-	No need to set in the case of the SJ300
73	Software lock mode selection	-	F-25	S-LOCK	MD1	b031	01	
74	STOP key enable	-	F-28	STOP-SW	ON	b087	00	
75	Rotational direction restriction	-	F-29	F/R SW	FRE	b035	00	
76	Reverse RUN protection enable	-		F/R PREEV	OFF	b046	00	
77	Analog input selection	A48	F-31	IN ANA	10V	Note	-	Note: Please adjust with analog input setting functions
78	Analog input active range start frequency	A26		IN EXS	0.0Hz	Note	0.00	Note: (SJ300) O: A011, OI: A101, O2: A111
79	Analog input active range end frequency	A27		IN EXE	0.0Hz	Note	0.00	Note: (SJ300) O: A012, OI: A102, O2: A112
80	Analog input active range start voltage/current	-		IN EX%S	0%	Note	0(O), 20(OI), -100(O2)	Note: (SJ300) O: A013, OI: A103, O2: A113
81	Analog input active range end voltage/current	-		IN EX%E	100%	Note	100	Note: (SJ300) O: A014, OI: A104, O2: A114
82	Analog input start frequency enable	-		IN LEVEL	0Hz	Note	01(0Hz)	Note: (SJ300) O: A015, OI: A105
83	External frequency filter time constant	A11		IN F-SAMP	8	A016	8	
84	Frequency arrival signal output method	A49	F-32	ARV PTN	CST	Note	-	Note: Selection from FA1 to FA5 at an intelligent output terminal
85	Frequency arrival setting for acceleration	A39		ARV ACC	0.0Hz	C042(045)	0.00	
86	Frequency arrival setting for deceleration	A40		ARV DEC	0.0Hz	C043(046)	0.00	
87	Over-torque (forward) level setting	-	F-33	OV-TRQ V	100%	C055/C056	100	Note: Forward-driving/reverse-regenerating can be set independently in the case of the SJ300.
88	Over-torque (reverse) level setting	-		OV-TRQ R	100%	C057/C058	100	Note: Reverse-driving/forward-regenerating can be set independently in the case of the SJ300.
89	Intelligent input terminal 1 function	C0	F-34	IN-TM 1	RS	C001	18(RS)	
90	Intelligent input terminal 2 function	C1		IN-TM 2	AT	C002	16(AT)	
91	Intelligent input terminal 3 function	C2		IN-TM 3	JG	C003	06(JG)	
92	Intelligent input terminal 4 function	C3		IN-TM 4	FRS	C004	11(FRS)	
93	Intelligent input terminal 5 function	C4		IN-TM 5	CH1	C005	09(2CH)	
94	Intelligent input terminal 6 function	C5		IN-TM 6	CF2	C006	03(CF2)(CE ver.)/13(USP)(UL ver.)	
95	Intelligent input terminal 7 function	C6		IN-TM 7	CF1	C007	02(CF1)	
96	Intelligent input terminal 8 function	C7		IN-TM 8	REV	C008	01(RV)	

No.	Name	J300		SJ300		Remarks
		Function code	Default	Function	Default setting	

		Digital operator	Remote Operator		setting	code (Digital operator)		
97	Intelligent input terminal 1 active state	C20		IN-TM O/C-1	NO	C011	00(NO)	Logic conversion for the intelligent input terminal 5 to 8 of the SJ300 can be also possible by C015 to C018.
98	Intelligent input terminal 2 active state			IN-TM O/C-2	NO	C012	00(NO)	
99	Intelligent input terminal 3 active state			IN-TM O/C-3	NO	C013	00(NO)	
100	Intelligent input terminal 4 active state			IN-TM O/C-4	NO	C014	00(NO)	
101	Intelligent output terminal 11 function	C10	F-35	OUT-TM 1	FA1	C021	01(FA1)	
102	Intelligent output terminal 12 function	C11		OUT-TM 2	RUN	C022	00(RUN)	
103	Alarm relay terminal active state	C21		OUT-TM O/C-A	NC	C036	01(NC)	
104	Intelligent input terminal 11 active state			OUT-TM O/C-1	NO	C031	00(NO)	
105	Intelligent input terminal 12 active state			OUT-TM O/C-2	NO	C032	00(NO)	
106	Monitor signal selection	A44	F-37	MONITOR	A-F	C027	00	
107	Operation mode on expansion card 1 error	-	F-47	OP-ERR1	STP	P001	00	
108	Operation mode on expansion card 1 error	-		OP-ERR2	STP	P002	00	
109	Encoder pulse-per-revolution setting	-	F-39	OP P	1024 pulses	P011	1024	
110	Control pulse setting	-		OP MODE	ASR	P012	00	
111	R0-T0 PCB selection	A99		OP R0-T0	OFF	-	-	R0-T0 function is provided as standard in the case of the SJ300.
112	Home search stop position selection	-	F-40	OR POS	IN	-	-	
113	Home search stop position setting	-		OR P	0 pulse	P014	0.	
114	Home search speed setting	-		OR FC	5.0Hz	P015	5.00	
115	Home search direction setting	-		OR TURN	FWD	P016	00	
116	Home search completion range setting	-		OR L	5pulse	P017	5	
117	Home search completion delay time setting	-		OW TW	0.00s	P018	0.00	
118	Electronic gear set position selection	-	F-41	PO EGRP	FB	P019	00	
119	Electronic gear ratio numerator setting	-		PO EGR-N	1	P020	1	
120	Electronic gear ratio denominator setting	-		PO EGR-D	1	P021	1	
121	Feed-forward gain setting	-		PO FFWG	0.00	P022	0.00	
122	Position loop gain setting	-		PO D	0.5rad/s	P023	0.50	
123	Torque limit selection	-	F-42	TRQ LIMIT	REM	b040	00	
124	Torque limit (forward) setting	-		TRQ FWD	150%	b041/b042	150	Forward-driving/reverse-regenerating can be set independently in the case of the SJ300.
125	Torque limit (reverse) setting	-		TRQ REV	150%	b043/b044	150	Reverse-driving/forward-regenerating can be set independently in the case of the SJ300.
126	PID setpoint input selection	A95	F-43	PID IN-SEL	IN	-	-	The current frequency command serves as the setpoint. (SJ300)
127	PID setpoint setting	A96		PID LVL	0.0%	F001	0.00	The current frequency command serves as the setpoint. (SJ300)
128	PID proportional gain	A90		PID P	1.0	A072	1.0	
129	PID integral time constant	A91		PID I	1.00s	A073	1.0	
130	PID derivative time constant	A92		PID D	0.0	A074	0.00	
131	PID enable	A94		PID MODE	0	A071/A076	00/00 (OI)	
132	Communication speed selection	-	F-46	COM BAU	600bps	C071	04 (4800bps)	
133	Node allocation	-		COM NUMBER	01	C072	1	
134	Communication data length selection	-		COM LENGTH	8	C073	7	
135	Communication parity selection	-		COM PAR-SEL1	ON	C074	00	
136	Even parity/odd parity selection	-		COM PAL-SEL2	EVN			
137	Communication stop bit selection	-		COM STOPBIT	2	C075	1	
No.	Name	J300				SJ300		Remarks
		Function code			Default	Function	Default setting	

		Digital operator	Remote Operator		setting	code (Digital operator)		
138	Relay output terminal RYA signal selection	-	F-48	RELAY RYA	RUN	-	-	The SJ300 does not have relay outputs. Please use L300PTM (Control circuit terminal block for the L300P).
139	Relay output terminal RYB signal selection	-		RELAY RYB	CST	-	-	
140	Relay output terminal RYC signal selection	-		RELAY RYC	OTQ	-	-	
141	Digital operator expanded function setting	F14	-	-	AO	-	-	
142	O/O2 input span calibration	A80	-	-	-	C081/C083	Factory-calibrated	In the case of the SJ300, O and O2 terminal can be calibrated independently. Zero calibration (C121/C123) is also available.
143	OI input span calibration	A81	-	-	-	C082	Factory-calibrated	Zero calibration (C122) is also available.

4.3 Carrier frequency

The default value and the maximum value for the carrier frequency are different between J300 and SJ300.
While the maximum value of the carrier frequency is set as default in the case of the J300,
SJ300's carrier frequency defaults to 5kHz (3kHz: 75kW to 150kW).
SJ300's carrier frequency can be adjustable up to 15kHz (10kHz: 75kW to 150kW) with derating.

J300 carrier frequency

Inverter capacity (kW)	Carrier frequency (kHz)
1.5 to 15	16.0
22	12.0
30 to 37	10.0
45 to 55	6.0
75 to 110	3.0
132 to 220	2.0

SJ300 carrier frequency derating data

Voltage class	200V class		400V class	
Inverter capacity (kW)	Maximum carrier frequency without derating（kHz）	Derating at 15kHz (% of inverter's rated Amps)	Maximum carrier frequency without derating（kHz）	Derating at 15kHz (10kHz: 75kW to 150kW) (% of inverter's rated Amps)
0.4	15	100	-	-
0.75	15	100	15	100
1.5	15	100	15	100
2.2	15	100	15	100
3.7	15	100	15	100
5.5	15	100	15	100
7.5	15	100	15	100
11	15	100	15	100
15	12	95 (60.8A or less)	15	100
18.5	8	80 (60.8A or less)	15	100
22	5	65 (61.8A or less)	10	80 (38.4A or less)
30	5	80 (96.8A or less)	10	75 (43.5A or less)
37	10	90 (130.5A or less)	10	95 (71.2A or less)
45	7	70 (127.4A or less)	10	80 (72A or less)
55	6	70 (154A or less)	6	60 (66A or less)
75	—		8	95 (141.5A or less)
90	—		6	80 (140.8A or less)
110	—		6	70 (151.9A or less)
132/150	—		3	60 (156A or less)